FORM MS-4271-82
REPLACES FORM MS-4271-32
FILE IN SECT. 2 OF SERVICE MANUAL

80200 To 80297
81200 To 81297

Illustrated Parts List

MODEL SERIES

80200 To 80297 • 81200 To 81297

TYPE NUMBERS	TYPE NUMBERS
0010 through 0597	0010 through 0202
9010 through 9598	9010 through 9197
948000 through 948230	948500 through 948669
951000 through 951047	951500 through 951545

TO FIND THE CORRECT NUMBER OF THE PART YOU NEED: FOLLOW THE INSTRUCTIONS BELOW.

A. Refer to Engine Model, Type and Code Number (formerly Serial Number) that is stamped on the blower housing or name plate of engine. (Engine type numbers such as 948669 are listed complete. Engine type numbers such as 0147 01 are listed herein only as 0147. The two digits (01 or 02, etc.) to the right of the space are not needed for parts identification). Then use the Illustrated Parts List covering these Model Series.

B. Refer to Illustrated Parts section and compare the old part with illustration. The number on the illustration is the Reference Number. Assemblies include all parts shown in frames. All parts shown in assembly frames on which individual reference numbers are given can be purchased separately.

C. After the Reference Number has been identified, refer to the Numerical Parts List, where Reference and Master Part Numbers are listed. THE MASTER PART IS USED ON ALL TYPE NUMBERS EXCEPT THOSE TYPE NUMBERS UNDER "NOTE".

D. If a "Note" appears below the Master Part Number, this means that this part differs from the Master Part for certain types. If the Type Number is listed under "Note", order the part referred to.

E. If the Engine Type Number does not appear after any part number listed under "Note", use the Master Part Number.

F. For Type Numbers higher than those covered by this book, please refer to the factory if you are unable to identify the part by comparison.

PRINTED IN U.S.A.

ORIGINAL BRIGGS & STRATTON SERVICE PARTS ®

80200 To 80297
81200 To 81297

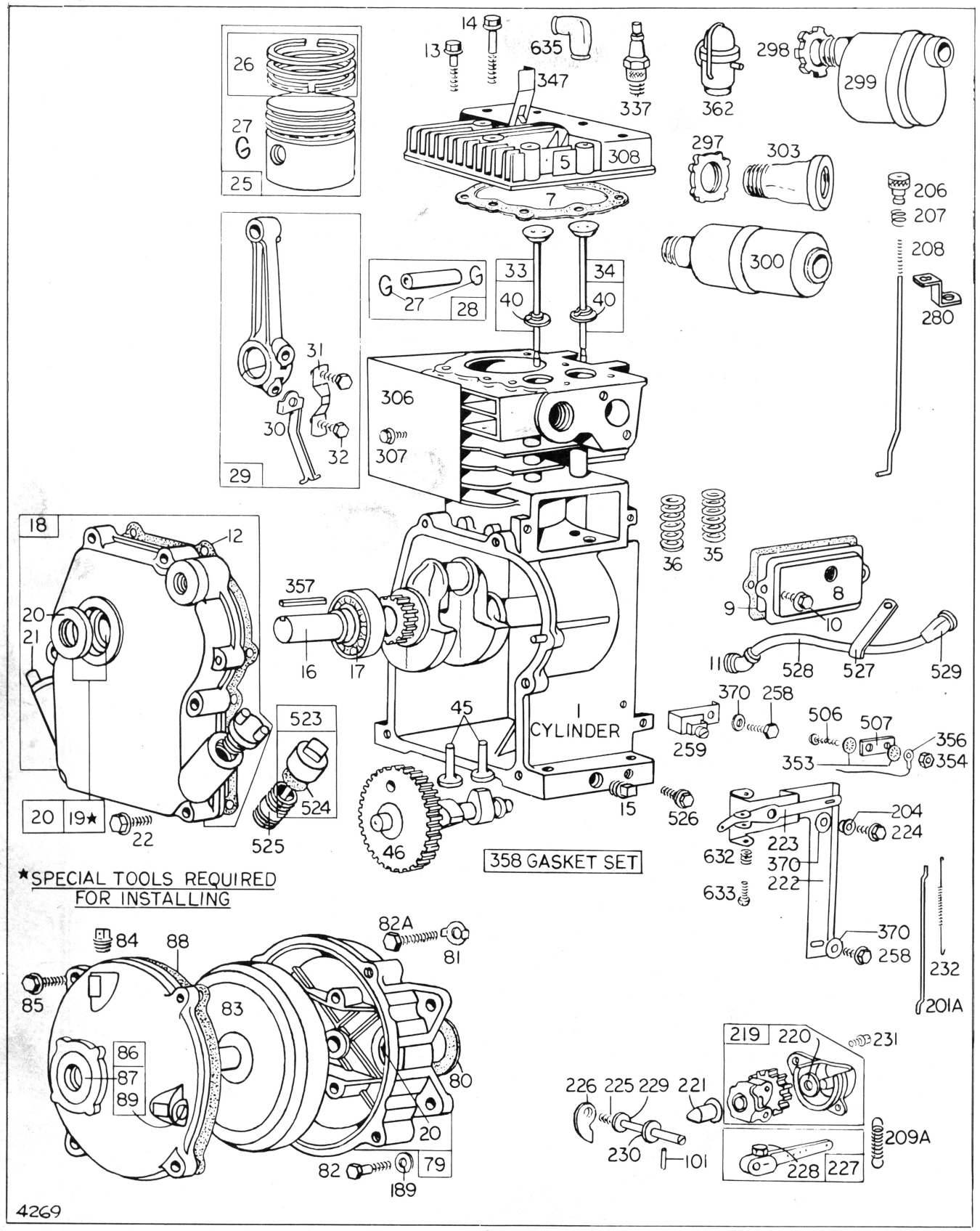

Assemblies include all parts shown in frames.

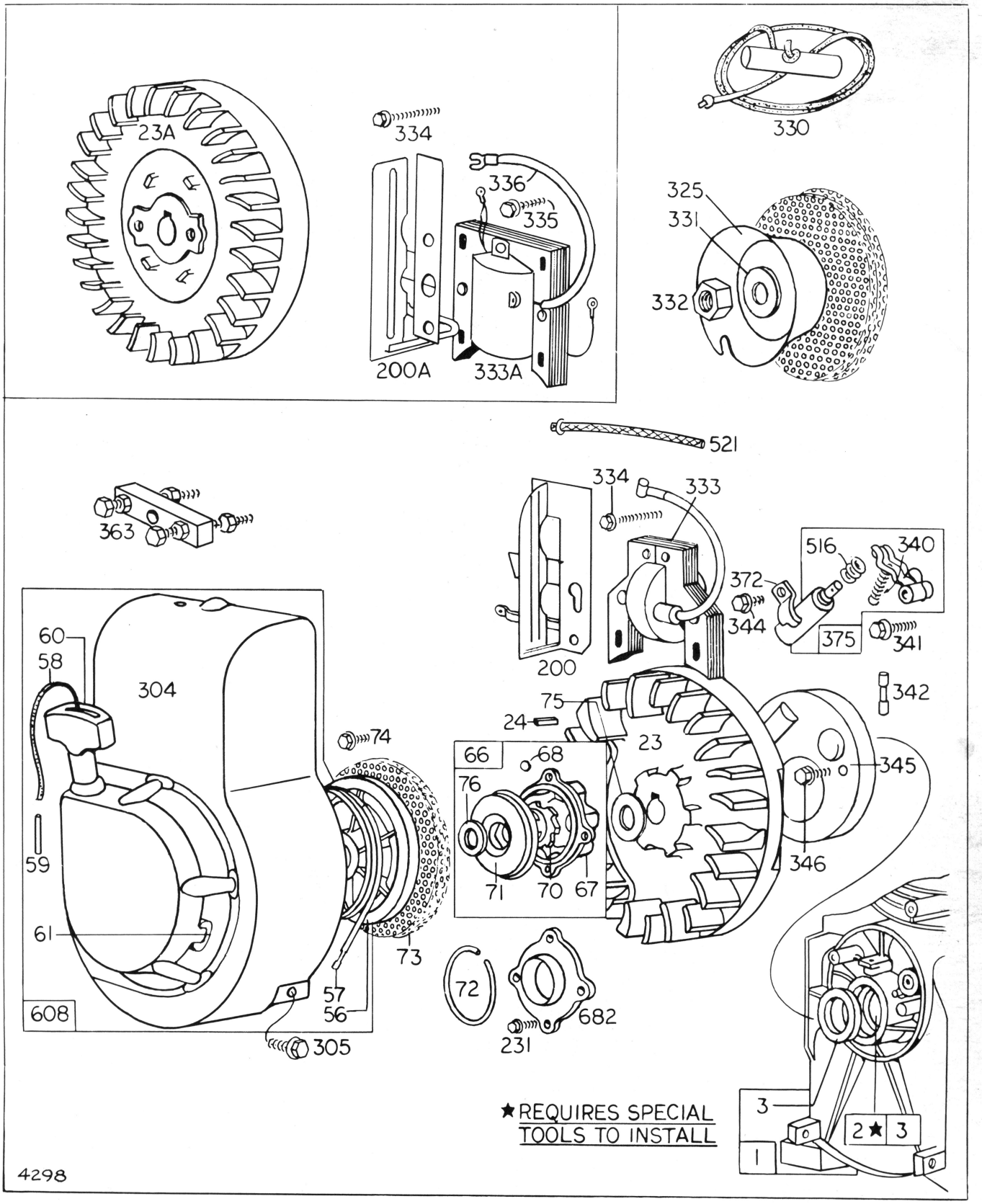

Assemblies include all parts shown in frames

80200 To 80297
81200 To 81297

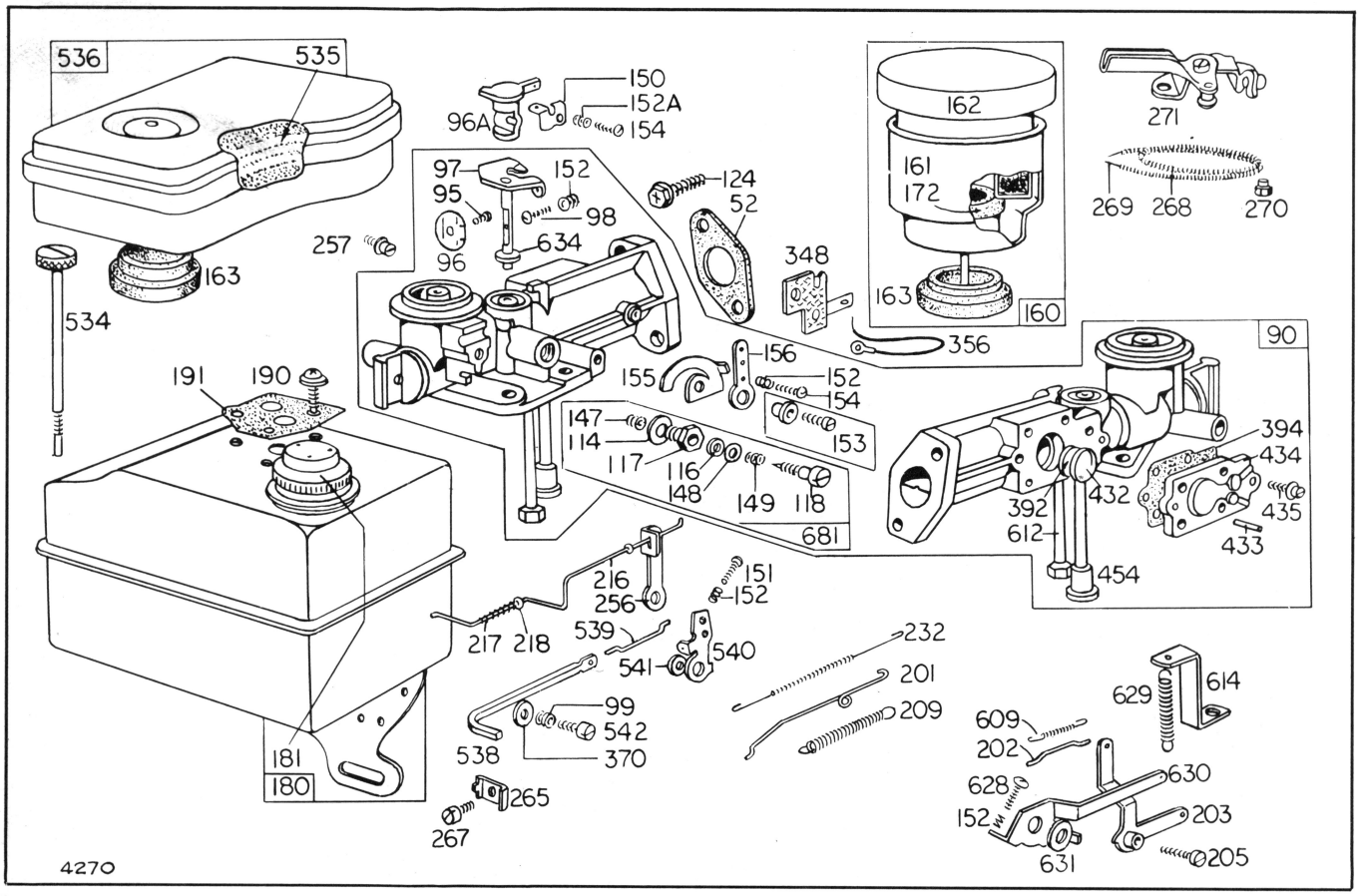

Assemblies include all parts shown in frames.

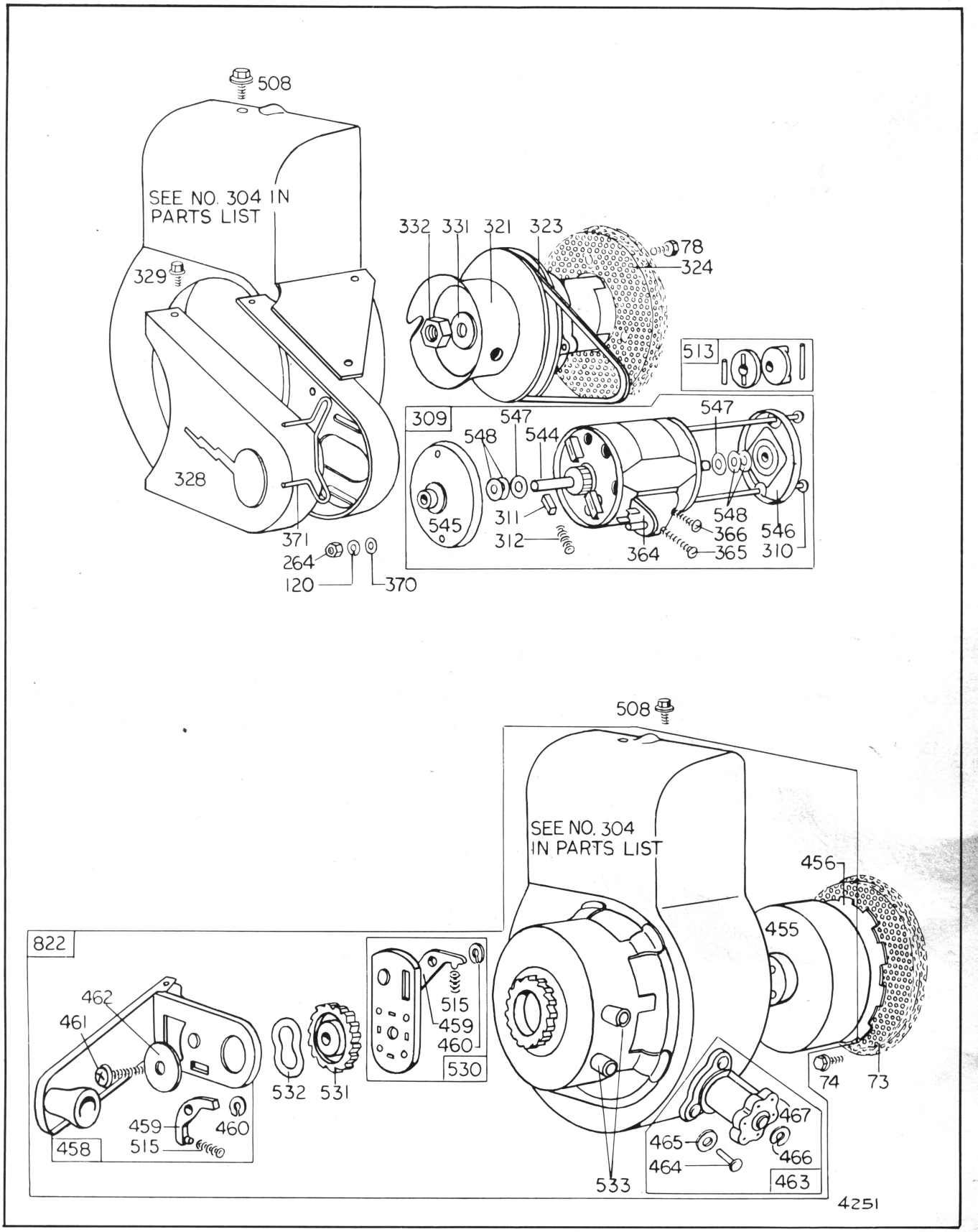

Assemblies include all parts shown in frames.

80200 To 80297
81200 To 81297

REF. NO.	PART NO.	DESCRIPTION
1	**296561**	Cylinder Assembly Used on *Model 80200* Series
	296610	Cylinder Assembly Used on *Model 81200* Series
2	**293708**	Bushing–Cylinder
	Note:	Requires special tools for installation.
3	**89660**	Seal–Oil
5	**210812**	Head–Cylinder
7	***27670**	Gasket–Cylinder Head
8	**294178**	Breather–Valve Chamber
9	***27549**	Gasket–Valve Cover
10	**93394**	Screw–Breather Mounting Sem
11	**66578**	Grommet –Breather Tube
12	***27586**	Gasket–Crankcase– .015'' thick (Standard)
	***27617**	Gasket–Crankcase– .005'' thick
	***27618**	Gasket– Crankcase– .009'' thick
13	**93111**	Screw–Cylinder Head (1-15/16'' long)
14	**93113**	Screw–Cylinder Head (2-5/16'' long)
15	**91249**	Plug–Pipe, 1/4'' Std., Square Head
	Note:	**91474** Plug–Oil Drain Slotted Head Used on *Model 80200* Series type Nos. 948050, 948055, 948060. **92737** Plug–Oil Drain Used on *Model 80200* Series type No. 9495; also used on *Model 81200* Series type No. 9188.
	93738	Plug–Oil Drain (Hex. Socket Head) Used on type Nos. 0547, 0587, 0589, 0591.
16	**260257**	Crankshaft
	Note:	**260104** Crankshaft Used on *Model 80200* Series type Nos. 0110, 0115, 0195, 0205, 0215, 0224, 0238, 0345, 9133, 948010, 948012, 948027, 948029, 948086, 948100, 948116, 948120, 948138, 948145, 948193, 951010, 951012; also used on *Model 81200* Series type Nos. 0110, 0115, 0150, 0185, 948510, 948512, 948527, 948529, 948578, 948600, 948629, 951510, 951512. **260106** Crankshaft Used on *Model 80200* Series type Nos. 0120, 0200, 0222, 0274, 9145, 948015, 948017, 948031, 948033, 948229, 951015, 951017; also used on *Model 81200* Series type Nos. 0120, 0148, 9151, 948515, 948517, 948531, 948533, 948592, 948609, 951515, 951517. **260107** Crankshaft Used on *Model 80200* Series type Nos. 0176, 0185, 0206, 0240, 0350, 948082, 948161, 948171, 948195, 948208; also used on *Model 81200* Series type Nos. 0142, 0173, 948564, 948602, 948647, 948660. **260109** Crankshaft Used on *Model 80200* Series type Nos. 0299, 9191, 9305, 9325, 951045. **260110** Crankshaft Used on *Model 80200* Series type Nos. 0038, 0121, 0203, 0221, 0346, 0453, 0494, 9146, 948016, 948018, 948032, 948034, 948070, 948224, 951016, 951018; also used on *Model 81200* Series type Nos. 0121, 0192, 948516, 948518, 948532, 948534, 948593, 948626, 951516, 951518. **260111** Crankshaft Used on *Model 80200* Series type Nos. 0149, 0150, 0153, 0183, 0219, 0246, 0270, 0276, 0289, 0311, 0317, 0318, 0328, 0340, 0358, 0365, 0369, 0388, 0392, 0396, 0398, 0407, 0428, 0455, 0456, 0459, 0474, 0502, 0511, 0517, 0534, 0559, 0595, 9155, 9253, 9377, 9509, 9530, 948049, 948062, 948071, 948075, 948085, 948099, 948122, 948147, 948166, 948179, 948210, 948225, 951047; also used on *Model 81200* Series type Nos. 0160, 0163, 0166, 0172, 0177, 0186, 9197, 948549, 948555, 948556, 948557, 948558, 948569, 948583, 948662. **260113** Crankshaft Used on *Model 80200* Series type Nos. 9044, 9217, 9251,

* Included in Gasket Set–Part No. 297275.

REF. NO.	PART NO.	DESCRIPTION
		9309, 9324, 9383, 9397, 9409, 9414, 9415, 9418, 9439, 9450, 9452, 9538, 9571, 9575, 951025, 951026; also used on *Model 81200* Series type Nos. 951525, 951526.
		260114 Crankshaft Used on *Model 80200* Series type Nos. 0125, 0171, 0184, 0210, 0218, 0257, 0307, 0368, 948020, 948022, 948035, 948037, 948093, 948109, 948150, 948187, 948215, 951020, 951022; also used on *Model 81200* Series type Nos. 0125, 0169, 0171, 948520, 948522, 948535, 948537, 948565, 948596, 948599, 948617, 948621, 948652, 951520, 951522.
		260115 Crankshaft Used on *Model 80200* Series type Nos. 0049, 0126, 0141, 0151, 0156, 0157, 0186, 0194, 0207, 0209, 0211, 0228, 0230, 0235, 0253, 0259, 0260, 0263, 0271, 0273, 0281, 0303, 0313, 0320, 0335, 0338, 0341, 0348, 0356, 0367, 0371, 0380, 0403, 0421, 0425, 0447, 0462, 0464, 0500, 0518, 0523, 0532, 0560, 0562, 0564, 0566. 948021, 948023, 948036, 948038, 948076, 948077, 948088, 948097, 948105, 948126, 948132, 948140, 948144, 948149, 948157, 948160, 948169, 948174, 948176, 948182, 948185, 948186, 948205, 948207, 948214, 948219, 951021, 951023; also used on *Model 81200* Series type Nos. 0126, 0155, 0161, 0165, 0199, 948521, 948523, 948536, 948538, 948545, 948546, 948561, 948580, 948613, 948614, 948618, 948622, 948627, 948641, 948651, 948655, 948664, 951521, 951523.
		260121 Crankshaft Used on *Model 80200* Series type Nos. 0173, 9354, 948090, 948121; also used on *Model 81200* Series type Nos. 0159, 948633, 948653, 948654, 948669.
		260132 Crankshaft Used on *Model 80200* Series type Nos. 0165, 0231, 0255, 0278, 0292, 0301, 0308, 0323, 0330, 0334, 0336, 0366, 0372, 0373, 0378, 0385, 0399, 0404, 0405, 0406, 0410, 0420, 0422, 0426, 0430, 0431, 0441, 0465, 0466, 0471, 0475, 0476, 0477, 0482, 0486, 0493, 0497, 0503, 0514, 0520, 0528, 0536, 0542, 0547, 0552, 0553, 0554, 0568, 0570, 0586, 0587, 0590, 0591, 0592, 9165, 948143, 951044; also used on *Model 81200* Series type Nos. 948567, 948568, 948589, 948616.
		260145 Crankshaft Used on *Model 81200* Series type No. 951541.
		260182 Crankshaft Used on *Model 80200* Series type Nos. 0036, 0164, 0216, 0225, 0227, 0267, 0277, 0283, 0295, 0304, 0322, 0351, 0359, 0382, 0386, 0390, 0436, 0442, 0448, 0457, 0460, 0467, 0473, 0483, 0485, 0508, 0516, 0526, 0537, 0556, 0580, 0597, 9495, 948063, 948064, 948118, 948119, 948127, 948162, 948189; also used on *Model 81200* Series type Nos. 0141, 0149, 0152, 0158, 0179, 0190, 0193, 9188, 948547, 948563, 948576, 948584, 948608, 948634, 948636, 948643, 948646.
		260186 Crankshaft Used on *Model 80200* Series type Nos. 0214, 0376, 948141.
		260187 Crankshaft Used on *Model 80200* Series type Nos. 0040, 0166, 0170,

REF. NO.	PART NO.	DESCRIPTION
		0220, 0302, 0379, 0381, 0384, 0389, 0402, 0438, 0498, 0499, 0505, 0544, 0550, 0557, 0577, 0581, 948103, 948188, 948200; also used on *Model 81200* Series type Nos. 0143, 0168, 0174, 0184, 0201, 948639, 948649,
		260201 Crankshaft Used on *Model 80200* Series type No. 0632.
		260268 Crankshaft Used on *Model 80200* Series type Nos. 0168, 0196, 0208, 0261, 0306, 0391, 948104, 948117, 948134; also used on *Model 81200* Series type Nos. 0138, 0144, 0145, 0153, 0154, 0156, 0162, 0175, 0189, 948575, 948595, 948624, 948625, 948644, 948658, 948665.
		260276 Crankshaft Used on *Model 80200* Series type Nos. 0432, 948066; also used on *Model 81200* Series type Nos. 948571, 948587.
		260395 Crankshaft Used on *Model 80200* Series type No. 948055; also used on *Model 81200* Series type Nos. 0135, 948605.
		260488 Crankshaft Used on *Model 80200* Series type Nos. 0198, 0364, 0375, 948067, 948139, 948213; also used on *Model 81200* Series type Nos. 0146, 0164, 0178, 0191, 948572, 948623, 948628, 948640, 948666.
		260489 Crankshaft Used on *Model 80200* Series type Nos. 0037, 0169, 0174, 0190, 0233, 0287, 0290, 0374, 0433, 0434, 0479, 9161, 948057, 948059, 948064, 948069, 948123, 948131, 948155, 948191, 948192, 948211, 948216, 948226, 951046; also used on *Model 81200* Series type Nos. 0181, 0194, 0198, 0200, 948570, 948573, 948574, 948585, 948590, 948612, 948659.
		260490 Crankshaft Used on *Model 81200* Series type No. 0176.
		260491 Crankshaft Used on *Model 80200* Series type Nos. 0039, 0239, 0254, 0327, 948228; also used on *Model 81200* Series type Nos. 0133, 948577.
		260492 Crankshaft Used on *Model 80200* Series type Nos. 0280, 0361.
		260512 Crankshaft Used on *Model 80200* Series type No. 9300.
		260562 Crankshaft Used on *Model 80200* Series type Nos. 0163, 0201, 0237, 0250, 0262, 0266, 0297, 0342, 0355, 0357, 0458, 0484, 0504, 0531, 0569, 0583, 948159, 948180; also used on *Model 81200* Series type Nos. 948551, 951540.
		260673 Crankshaft Used on *Model 81200* Series type Nos. 0147, 948637.
		260674 Crankshaft Used on *Model 80200* Series type Nos. 948151, 948152; also used on *Model 81200* Series type No. 948638.
		260759 Crankshaft Used on *Model 80200* Series type No. 9252; also used on *Model 81200* Series type Nos. 9139, 9183, 951545.
		260932 Crankshaft Used on *Model 80200* Series type Nos. 0035, 0574, 0596, 9314, 9440, 9451, 9469, 9489, 9563, 9598.
		261128 Crankshaft Used on *Model 80200* Series type No. 0507.
		261161 Crankshaft Used on type Nos. 0533, 0576.
17	**99158**	Bearing–Ball
18	**294305**	Cover Assembly–Crankcase Used on Model 80201, 80202, 80203, 80206, 81201, 81202, 81203, 81206 Series; **See No. 294307 Cover Assy., under Note, for exceptions.**

REF. NO.	PART NO.	DESCRIPTION
	Note:	**294306** Cover Assy.—Crankcase Used on Model 80231, 80232, 80233, 80236, 81231, 81232, 81233, 81236 Series. **294307** Cover Assy.—Crankcase Used on Model 80201, 80202, 80206 Series type Nos. 9023, 9024, 9133, 9134, 9165, 9312, 9347, 9387, 9416, 9417, 9513, 951010, 951011, 951012, 951013, 951039, 951040, 951041, 951042, 951043, 951044; *and on all Model 80211, 80212, 80251, 80252, 80253, 80256* Series; also used on Model 81201, 81202, 81202, 81206 Series Type Nos. 951510, 951511, 951512, 951513, 951539, 951540, 951541, 951542, 951543, 951544; *and on all Model 81211, 81212, 81251, 81252, 81253, 81256* Series. **296295** Cover Assy.—Crankcase Used on *Model 80200* Series type Nos. 948025, 948026, 948039, 948040, 948107, 948125, 948163, 948170, 948173, 948198; also used on *Model 81200* Series type Nos. 948525, 948526, 948539, 948540, 948566. **297378** Cover Assy.—Crankcase Used on *Model 80200* Series type Nos. 948136, 948153; also used on *Model 81200* Series on type No. 948632. **298281** Cover Assy.—Crankcase Used on *Model 80200* Series type Nos. 0133, 0136, 0158, 0162, 0197, 0234, 0243, 0332, 0401, 0539, 0582, 0592, 948221, 948222; also used on *Model 81200* Series type No. 0130.
19	**293708**	Bushing—Crankcase Cover
	Note:	**220538, 293708** Bushings require special tools for installation.
	Note:	**220538** Bushing—Crankcase Cover Used on Model 80211, 80212, 80251, 80252, 80253, 80256, 81211, 81212, 81251, 81252, 81253, 81256 Series
20	**89660**	Seal—Oil
	Note:	**293740** Seal—Oil Used on Model 80231, 80232, 80233, 80236, 81231, 81232, 81233, 81236 Series. **294207** Oil Seal and Spacer Used on *Model 80200* Series type Nos. 0115, 0116, 0212, 0250, 0268, 0292, 0297, 0298, 0308, 0329, 0423, 0431, 0435, 0437, 0449, 0460, 0463, 0468, 0470, 0472, 0475, 0490, 0492, 0536, 0558, 0570, 0573, 0589, 9023, 9024, 9133, 9134, 9165, 9312, 9347, 9387, 9416, 9417, 9513, 948177, 948230, 951010, 951011, 951012, 951013, 951039, 951040, 951041, 951042, 951043, 951044; also used on *Model 81200* Series type Nos. 948619, 948667, 951510, 951511, 951512, 951513, 951539, 951540, 951541, 951542, 951543, 951544. **294160** Seal—Oil Used on the auxiliary P.T.O. Shaft on *Model 80200* Series type Nos. 948025, 948026, 948039, 948040, 948107, 948125, 948163, 948170, 948173, 948198; also used on *Model 81200* Series type Nos. 948525, 948526, 948539, 948540, 948566. **298041** Seal—Oil Used on the auxiliary P.T.O. Shaft on *Model 80200* Series type Nos. 0135, 0136, 0158, 0162, 0197, 0234, 0243, 0332, 0401, 0539, 0582, 0592, 948221, 948222; also used on *Model 81200* Series type No. 0130.
21	**66768**	Plug—Oil Filler
	Note:	**298858** Oil Minder Used on *Model 80200* Series type Nos. 0199, 0224, 0238, 0256, 0293, 0304, 0330, 0351.
22	**93032**	Screw—Crankcase Cover Mounting Sem

REF. NO.	PART NO.	DESCRIPTION
	Note:	**92747** Screw–Crankcase Mounting Sem Used in two top holes to mount cover on Model 80211, 80212, 80251, 80252, 80253, 80256, 81211, 81212, 81251, 81252, 81253, 81256 Series and on *Model 80200* Series type Nos. 9023, 9024, 9133, 9134, 9165, 9312, 9347, 951010, 951011, 951012, 951013, 951039, 951040, 951041, 951042, 951043, 951044; also used on *Model 81200* Series type Nos. 951510, 951511, 951512, 951513, 951539, 951540, 951541, 951542, 951543, 951544.
23	296884	Flywheel–Magneto (Used on and after Serial No. 6212310)
	Note:	**220971** Guard–Flywheel **93158** Screw (Mounting Guard to Cylinder) Used on *Model 80200* Series type Nos. 0446, 0463, 0466, 0471, 0472, 0482, 0518, 0587, 948151, 948152; also used on *Model 81200* Series type No. 948638.
23A	295936	Flywheel–Magneto (Used before Serial No. 6212310)
24	61760	Key–Flywheel
25	295587	Piston Assembly–Std.
	Note:	**295455** Piston Assy.–Standard Used on *Model 81200* Series.
	295588	Piston Assembly–.010" O.S.
	Note:	**295456** Piston Assy.–.010" O.S. Used on *Model 81200* Series.
	295589	Piston Assembly–.020" O.S.
	Note:	**295457** Piston Assy.–.020" O.S. Used on *Model 81200* Series.
	295590	Piston Assembly–.030" O.S.
	Note:	**295458** Piston Assy.–.030" O.S. Used on *Model 81200* Series.
MODEL 80200 SERIES RING SETS:		
	Note:	For Chrome Piston Ring Set–standard size–order Part No. 297201.
26	294232	Ring Set–Std. Piston, Consists of: **210471** Ring, Piston, Compression, Top **210472** Ring, Piston, Compression, Center **210473** Ring, Piston Oil
	294224	Ring Set–.010" O.S. Piston Consists of: **210490** Ring, Piston, Compression, Top, .010" O.S. **210489** Ring, Piston, Compression, Center, .010" O.S. **210491** Ring, Piston, Oil, .010" O.S.
	294225	Ring Set–.020" O.S. Piston Consists of: **210493** Ring, Piston, Compression, Top, .020" O.S. **210492** Ring, Piston, Compression, Center, .020" O.S. **210494** Ring, Piston, Oil, .020" O.S.
	294226	Ring Set–.030" O.S. Piston, Consists of: **210496** Ring, Piston, Compression, Top, .030" O.S. **210495** Ring, Piston, Compression, Center, .030" O.S. **210497** Ring, Piston, Oil, .030" O.S.
MODEL 81200 SERIES RING SETS:		
	Note:	For Chrome Piston Ring Set–standard size–order Part No. 297201.
	295657	Ring Set–Std. Piston, Consists of: **210796** Ring, Piston, Compression, Top, Std. **210797** Ring, Piston, Compression, Center, Std. **295661** Ring, Oil, (w/expander) Standard
	295658	Ring Set–.010" O.S. Piston, Consists of: **210799** Ring, Piston, Compression, Top, .010" O.S. **210798** Ring, Piston, Compression, Center, .020" O.S. **295662** Ring, Oil (w/expander) .010" O.S.
	295659	Ring Set–.020" O.S. Piston, **210801** Ring, Piston, Compression, Top, .020" O.S. **210800** Ring, Piston, Compression, Center, .020" O.S. **295663** Ring, Oil, (w/expander) .020" O.S.
	295660	Ring Set–.030" O.S. Piston, Consists of:

REF. NO.	PART NO.	DESCRIPTION
		210803 Ring, Piston, Compression, Top, .030" O.S.
		210802 Ring, Piston, Compression, Center, .030" O.S.
		295664 Ring, Oil, (w/expander) .030" O.S.
27	**26026**	Lock–Piston Pin
28	**298909**	Pin Assembly–Piston–Standard
	298908	Pin Assembly–Piston–.005" O.S.
29	**294367**	Rod Assy.–Connecting
	Note:	For Connecting Rod with .020" undersize Crankpin Bore–order No. 296079.
30	**220670**	Dipper–Connecting Rod
31	**220756**	Lock–Connecting Rod Screw
32	**92296**	Screw–Connecting Rod
33	**296676**	Valve–Exhaust (Grooved Stem–Includes Retainer No. 93312)
	Note:	**26973** Valve–Exhaust (with hole in stem) Used on *Model 80200* Series on type Nos. 0035, 0036, 0037, 0038, 0039, 0040, 0049, 0208, 0248, 0277, 0315, 0374, 0375, 0392, 0432, 0433, 0434, 0436, 0453, 0479, 0485, 0505, 0516, 0526, 0550, 0559, 9044, 9191, 948094, 948117, 948118, 951045; also used on *Model 81200* Series type Nos. 0144, 0146, 0147, 0148, 0156, 0159, 0164, 0178, 0181, 0184, 0189, 0190, 0191, 0192, 0194, 948571, 948572, 948573, 948574, 948575, 948576, 948590, 948591, 948592, 948608, 948623, 948628, 948629, 948637, 948659, 948660, 948665, 948666, 948669.
		260075 Valve–Exhaust (with hole in stem) Used on *Model 80200* Series type Nos. 0222, 0223, 0225, 0240, 0295, 0304, 0307, 0346, 0349, 0351, 0359, 0391, 0473, 0597, 9044, 9309, 9325, 9495, 9571, 948094, 948119, 948120, 948147, 948161, 948179, 948229, 948230; also used on *Model 81200* Series type Nos. 0162, 0169, 0175, 9188.
34	**296677**	Valve–Intake (Grooved Stem–Includes Retainer No. 93312)
	Note:	**230101** Valve–Intake (with hole in stem) Used on *Model 80200* Series type Nos. 0222, 0223, 0225, 0240, 0295, 0307, 0315, 0346, 0349, 0351, 0359, 0391, 0473, 0597, 9044, 9309, 9325, 9495, 9571, 948094, 948119, 948120, 948147, 948161, 948179, 948229, 948230; also Used on *Model 81200* Series type Nos. 0162, 0169, 0175, 9188, 948608, 948660.
35	**260552**	Spring–Intake Valve
36	**26478**	Spring–Exhaust Valve
	Note:	**26826** Spring–Exhaust Valve Used on *Model 80200* Series type Nos. 0035, 0036, 0037, 0038, 0039, 0040, 0049, 0208, 0225, 0248, 0277, 0295, 0304, 0307, 0346, 0349, 0351, 0359, 0374, 0375, 0391, 0392, 0432, 0433, 0434, 0436, 0453, 0473, 0479, 0485, 0505, 0516, 0526, 0550, 0559, 0597, 9044, 9191, 9309, 9325, 9495, 9571, 948117, 948118, 948119, 948179, 948230, 951045; also used on *Model 81200* Series type Nos. 0144, 0146, 0147, 0148, 0156, 0159, 0162, 0164, 0169, 0175, 0178, 0181, 0184, 0189, 0190, 0191, 0192, 0194, 9188, 948571, 948572, 948573, 948574, 948575, 948576, 948590, 948591, 948592, 948608, 948623, 948628, 948629, 948637, 948659, 948665, 948666, 948669.
40	**93312**	Retainer–Valve Spring Used with valves with groove in stem.
	Note:	**23184** Retainer–Intake Valve **23187** Pin–Intake Valve Retainer Part Nos. 23184 and 23187 are used with valves with hole in

REF. NO.	PART NO.	DESCRIPTION
		stem except those with rotocap (as follows:) **292259** Rotocap–Exhaust Valve **230126** Pin–Rotocap Exhaust Valve Retainer **230127** Retainer–Exhaust Valve Rotocap Used on *Model 80200* Series type Nos. 0035, 0036, 0037, 0038, 0039, 0040, 0049, 0208, 0225, 0248, 0277, 0295, 0304, 0307, 0346, 0349, 0351, 0359, 0374, 0375, 0391, 0392, 0432, 0433, 0434, 0436, 0453, 0473, 0479, 0485, 0505, 0516, 0526, 0550, 0559, 0597, 9309, 9325, 9495, 9571, 948117, 948118, 948119, 948179, 948230, 951045; also used on *Model 81200* Series type Nos. 0144, 0146, 0147, 0148, 0156, 0159, 0162, 0164, 0169, 0175, 0178, 0181, 0184, 0189, 0190, 0191, 0192, 0194, 9188, 948571, 948572, 948573, 948574, 948575, 948576, 948590, 948591, 948592, 948608, 948623, 948628, 948629, 948637, 948659, 948665, 948666, 948669.
45	**230173**	Tappet–Valve
46	**210453**	Gear–Cam
	Note:	**210804** Gear–Cam Used on *Model 80200* Series type Nos. 948025, 948026, 948039, 948040, 948107, 948125, 948163, 948170, 948173, 948198; also used on *Model 81200* Series type Nos. 948525, 948526, 948539, 948540, 948566.
		211337 Gear–Cam Used on *Model 80200* Series type Nos. 0135, 0136, 0158, 0162, 0197, 0234, 0243, 0332, 0401, 0539, 0582, 0592, 948221, 948222; also used on *Model 81200* Series type No. 0130.
52	***27355**	Gasket–Intake Elbow Mounting (2 used)
56	**298738**	Pulley–Rewind Starter Used after Serial No. 6506301.
	Note:	**294088** Pulley–Rewind Starter Used before Serial No. 6507011.
57	**294303**	Spring–Rewind Starter
58	**66694**	Rope–Starter–47-1/8" Used after Serial No. 6506301.
	Note:	**294584** Rope–Starter–47-1/8" long Used before Serial No. 6507011. If longer rope is needed, order No. 66684 (used after Serial No. 6506301) or No. 66514 (used before Serial No. 6507011) and cut to required length.
59	**230228**	Pin–Starter Grip
60	**66728**	Grip–Starter Rope
61	**68618**	Bumper–Starter Pulley
66	**298310**	Clutch Assembly–Rewind and Wind-up Starter Used after Serial No. 6405220.
	Note:	**296468** Clutch Assy.–Rewind and Wind-up Starter Used before Serial No. 6405250. **298798** Clutch Assy.–Rewind Starter Used on type Nos. 0142, 0167, 0211, 0319, 0323, 0334, 0336, 0364, 0380, 0393, 0412, 0419, 0444, 0447, 0507, 0533, 0576, 9387, 9451, 9489.
67	**211383**	Housing–Starter Clutch Used after Serial No. 6405220.
	Note:	**210400** Housing–Starter Clutch Used before Serial No. 6405250.
68	**63770**	Ball–Clutch
70	**298436**	Ratchet–Rewind and Wind-up Starter Used after Serial No. 6405220.
	Note:	**296597** Ratchet–Rewind and Wind-up Starter Used before Serial No. 6405250. **298799** Ratchet–Rewind Uses: **66718** Thrust Washer Used on type Nos. 0142, 0167, 0211, 0319, 0323, 0334, 0336, 0364, 0380, 0393, 0412, 0419, 0444, 0447, 0507, 0533, 0576, 9387, 9451, 9489.
71	**221653**	Washer–Clutch Retainer Used after Serial No. 6405220.

* Included in Gasket Set–Part No. 297275

REF. NO.	PART NO.	DESCRIPTION
	Note:	**221301** Washer–Clutch Retainer (Used before Serial No. 6405220)
72	**26032**	Spring–Clutch Retainer Washer (Used before Serial No. 6405220)
73	**221661**	Screen–Rotating Used after Serial No. 6405220.
	Note:	**220648** Screen–Rotating (Used before Serial No. 6405250)
74	**93490**	Screw–Rotating Screen Mounting Sem
75	**220865**	Washer–Spring
76	**68238**	Washer–Ratchet Sealing Used after Serial No. 6405220.
	Note:	**270045** Washer–Sealing Used before Serial No. 6405250 on *Model 80200* Series type Nos. 0142, 0147, 0157, 0162, 0167, 0175, 0178, 0186, 0192, 0201, 0211, 0228, 948051, 948126, 948154, 948156, 948158, 948159, 948164, 948172, 948178, 948183, 948190, 948204, 948217; also used on *Model 81200* Series type No. 0132.
78	**93014**	Screw–Pulley Screen Mounting Sem
79	**290779**	Case Assy.–Gear
80	**27667**	Gasket–Gear Case
81	**220234**	Lock–Gear Case Mounting Screw
82	**91541**	Screw–Cap, Hex. Hd.–5/16-24 x 7/8"
82A	**92279**	Screw–Cap, Hex. Hd.–5/16-24 x 1-1/2"
83	**211293**	Shaft Assembly–Drive
	Note:	Order–Shaft Assembly–Drive Used on type No. 948617 from the equipment manufacturer. **211340** Shaft Assembly–Drive Used on *Model 80200* Series type Nos. 0380, 948097; also used on *Model 81200* Series type No. 948546. **211845** Shaft Assembly–Drive Used on *Model 80200* Series type No. 0447.
84	**92617**	Plug–Breather
85	**92747**	Screw–Gear Case Mounting Sem
86	**291730**	Cover Assembly–Gear Case
	Note:	Order–Cover Assy.–Gear Case Used on type No. 948617 from the equipment manufacturer.
87	**19011**	Seal–Oil
88	**27313**	Gasket–Gear Case Cover
89	**93448**	Plug–Oil Drain, 1/4" Pipe Thread (Used after Serial No. 6304170)
	Note:	**92015** Plug–Oil Drain 1/8" Pipe Thread (Used before Serial No. 6304180)
90	**296784**	Carburetor Assembly (Manual Choke)
	Note:	**296785** Carburetor Assy. (Manual Choke) Used on *Model 80200* Series type Nos. 0205, 0299, 0318, 948193; also used on *Model 81200* Series type Nos. 0163, 948598. **296799** Carb. Assy. (Choke-A-Matic) Used on *Model 80200* Series type Nos. 0132, 0142, 0144, 0234, 0242, 0273, 0278, 0293, 0319, 0328, 0333, 0352, 0357, 0366, 0372, 0388, 0404, 0406, 0422, 0430, 0458, 0477, 0486, 0493, 0501, 0506, 0515, 0540, 0545, 0547, 0549, 0572, 0590, 948027, 948028, 948029, 948030, 948031, 948032, 948033, 948034, 948035, 948036, 948037, 948038, 948039, 948040, 948072, 948092, 948111, 948114, 948125, 948130, 948148, 948172, 948177, 948183, 948184; also used on *Model 81200* Series type Nos. 0172, 0174, 0201, 948527, 948528, 948529, 948530, 948531, 948532, 948533, 948534, 948535, 948536, 948537, 948538, 948539, 948540, 948548, 948550, 948553, 948560, 948606, 948641. **296800** Carb. Assy. (Choke-A-Matic) Used on *Model 80200* Series type Nos. 0237, 0330, 0378, 0381, 0399, 0465, 0476, 0491, 0503, 0528, 0553, 0568, 0570, 0573, 0592,

REF. NO.	PART NO.	DESCRIPTION
		948102, 948133, 948143, 948168; also used on *Model 81200* Series type No. 948630.
		296825 Carb. Assy. (Manual Choke) Used on *Model 80200* Series type Nos. 0143, 0165, 0166, 0168, 0190, 0193, 0199, 0200, 0203, 0207, 0208, 0218, 0219, 0222, 0223, 0226, 0227, 0239, 0240, 0245, 0254, 0257, 0259, 0277, 0287, 0295, 0302, 0313, 0327, 0349, 0356, 0362, 0374, 0375, 0390, 0391, 0421, 0428, 0432, 0448, 0456, 0473, 0516, 0534, 0561, 0597, 948047, 948048, 948067, 948069, 948076, 968082, 948084, 948090, 948103, 948104, 948117, 948118, 948119, 948134, 948141, 948155, 948179, 948186, 948191, 948199, 948205, 948213, 948215, 948218, 948224, 948225, 948226, 948228; also used on *Model 81200* Series type Nos. 0116, 0133, 0144, 0147, 0154, 0162, 0175, 0176, 0190, 0193, 0200, 948571, 948575, 948576, 948577, 948595, 948596, 948608, 948609, 948612, 948617, 948621, 948624, 948625, 948637, 948644, 948646, 948658, 948659, 948665.
		296869 Carb. Assy. (Manual Choke) Used on *Model 80200* Series type Nos. 948136, 948153, 948204; also used on *Model 81200* Series type Nos. 948552, 948632.
		296882 Carburetor Assy. (Choke-A-Matic) Used on *Model 80200* Series type Nos. 0015, 0148, 0154, 0160, 0213, 0256, 0490, 0519, 0582, 948051, 948052, 948053, 948054, 948061, 948073, 948074, 948107, 948113, 948163, 948165, 948198; also used on *Model 81200* Series type Nos. 948566, 948582, 948661.
		296902 Carburetor Assy. (Manual Choke) Used on *Model 81200* Series type No. 948561.
		296903 Carburetor Assy. (Manual Choke) Used on *Model 80200* Series type Nos. 0152, 0156, 0163, 0173, 0186, 0187, 0210, 0229, 0231, 0232, 0233, 0244, 0253, 0263, 0271, 0281, 0283, 0288, 0294, 0297, 0304, 0334, 0345, 0351, 0379, 0389, 0392, 0400, 0410, 0423, 0438, 0442, 0453, 0462, 0467, 0484, 0498, 0526, 0529, 0532, 0578, 0587, 0589, 948045, 948046, 948049, 948071, 948075, 948079, 948080, 948089, 948099, 948115, 948116, 948121, 948137, 948140, 948150, 948154, 948174, 948176, 948180, 948182, 948203, 948206, 948207, 948220; also used on *Model 81200* Series type Nos. 0138, 0148, 0158, 0161, 0167, 0171, 0179, 0187, 0192, 0199, 948545, 948563, 948592, 948611, 948620, 948634, 948642, 948645, 948650, 948652, 948664.
		296904 Carburetor Assy. (Manual Choke) Used on *Model 80200* Series type Nos. 0149, 0150, 0153, 0157, 0172, 0178, 0185, 0194, 0202, 0211, 0220, 0225, 0230, 0238, 0243, 0246, 0249, 0250, 0260, 0270, 0272, 0275, 0276, 0279, 0280, 0284, 0285, 0291, 0296, 0298, 0301, 0303, 0307, 0308, 0317, 0321, 0336, 0337, 0339, 0342, 0343, 0348, 0360, 0361, 0363, 0368, 0370, 0373, 0376, 0380, 0382, 0385, 0386, 0393, 0398, 0402, 0405, 0408, 0411, 0412, 0419, 0420, 0424,

REF. NO.	PART NO.	DESCRIPTION
		0425, 0426, 0459, 0464, 0466, 0471, 0475, 0480, 0494, 0497, 0518, 0520, 0521, 0527, 0535, 0544, 0551, 0552, 0567, 0586, 0588, 0596, 948050, 948055, 948060, 948062, 948064, 948066, 948077, 948081, 948083, 948091, 948096, 948098, 948110, 948124, 948128, 948129, 948132, 948144, 948145, 948149, 948156, 948167, 948178, 948181, 948185, 948192, 948196, 948201, 948208, 948210, 948214, 948227; also used on *Model 81200* Series type Nos. 0132, 0135, 0136, 0137, 0140, 0141, 0143, 0152, 0155, 0165, 0166, 0168, 0169, 0170, 0186, 948551, 948562, 948581, 948583, 948584, 948585, 948587, 948588, 948605, 948610, 948613, 948614, 948615, 948616, 948627, 948635, 948636, 948648, 948649, 948653, 948655, 948656, 948657.
		296905 Carburetor Assy. (Manual Choke) Used on *Model 80200* Series type Nos. 0268, 0292, 0365, 0487, 0492, 0502, 0512, 0542, 0554, 0583, 948097, 948105, 948126, 948157; also used on *Model 81200* Series type Nos. 0177, 948546, 948549, 948622, 948638.
		296921 Carburetor Assy. (Choke-A-Matic) Used on *Model 80200* Series type Nos. 0136, 0151, 0269, 0323, 0332, 0344, 0355, 0504, 0579, 948146; also used on *Model 81200* Series type Nos. 948567, 948568, 948603, 948604, 948651.
		296927 Carburetor Assy. (Manual Choke) Used on *Model 80200* Series type Nos. 0016, 0140, 0141, 0158, 0159, 0181, 0189, 0197, 0212, 0252, 0258, 0326, 0395, 0401, 0536, 0539, 0558, 948058, 948078, 948112, 948135, 948160, 948170, 948173, 948175, 948212, 948230; also used on *Model 81200* Series type Nos. 948559, 948562, 948579, 948594, 948607, 948667.
		297019 Carburetor Assy. (Choke-A-Matic) Used on *Model 80200* Series type Nos. 0248, 0255; also used on *Model 81200* Series type No. 948589.
		297047 Carburetor Assy. (Manual Choke) Used on *Model 80200* Series type Nos. 0182, 948095, 948194; also used on *Model 81200* Series type Nos. 948597, 948631, 948633.
		297140 Carburetor Assy. (Mech. Governor–Manual Choke) Used on *Model 80200* Series type Nos. 9165, 9191, 9251, 9252, 9312, 9325, 9354, 9383, 9439, 9451, 9489, 9513, 9575, 951044, 951045; also used on *Model 81200* Series type No. 951526.
		297143 Carburetor Assy. (Mech. Governor–Manual Choke) Used on *Model 80200* Series type Nos. 9305, 9324, 9409, 9414, 9415, 9452.
		297153 Carburetor Assy. (Mech. Governor–Manual Choke) Used on *Model 80200* Series type Nos. 9044, 9133, 9134, 9145, 9146, 9155, 9161, 9217, 9300, 9309, 9314, 9377, 9387, 9397, 9416, 9417, 9418, 9440, 9450, 9469, 9495, 9509, 9530, 9538, 9563, 9571, 9598, 951010, 951011, 951012, 951013, 951015, 951016, 951017, 951018, 951020, 951021, 951022, 951023, 951025, 951026, 951043, 951046; also used on *Model 81200* Series type Nos. 9139, 9151, 9183,

REF. NO.	PART NO.	DESCRIPTION
		9188, 9197, 951510, 951511, 951512, 951513, 951515, 951516, 951517, 951518, 951520, 951521, 951522, 951523, 951525, 951541, 951545.
		297202 Carburetor Assy. (Mech. Governor–Manual Choke) Used on *Model 80200* Series type Nos. 9024, 9347, 951039, 951040, 951042; also used on *Model 81200* Series type Nos. 951540, 951542, 951543, 951544.
		297203 Carburetor Assy. (Mech. Governor–Manual Choke) Used on *Model 80200* Series type Nos. 9023, 9253, 951041; also used on *Model 81200* Series type No. 951539.
		297223 Carburetor Assy. (Manual Choke) Used on *Model 80200* Series type Nos. 0264, 0429, 0481; also used on *Model 81200* Series type Nos. 0157, 948619, 948663.
		297419 Carburetor Assy. (Manual Choke) Used on *Model 80200* Series type Nos. 0262, 0266, 948106.
		297877 Carburetor Assy. (Manual Choke) Used on *Model 80200* Series type No. 948152.
		297882 Carburetor Assy. (Manual Choke) Used on *Model 80200* Series type Nos. 0175, 948151.
		297903 Carburetor Assy. (Manual Choke) Used on *Model 80200* Series type Nos. 0137, 0147, 0282, 948154.
		297918 Carburetor Assy. (Manual Choke) Used on *Model 80200* Series type Nos. 0035, 0036, 0037, 0038, 0039, 0049, 0167, 0192, 0228, 0236, 0369, 0407, 0447, 0461, 0474, 0500, 0507, 0533, 0556, 0576, 0595, 948217; also used on *Model 81200* Series type Nos. 0142, 0160, 0202, 948647, 948654, 948662.
		297946 Carburetor Assy. (Manual Choke) Used on *Model 80200* Series type Nos. 0201, 0431, 0435, 0436, 0437, 0441, 0443, 0444, 0446, 0449, 0454, 0455, 0460, 0463, 0468, 0470, 0472, 0478, 0482, 0510, 0511, 0522, 0524, 0531, 0543, 0555, 0565, 0569, 0585, 0591, 948159, 948190.
		297995 Carburetor Assy. (Choke-A-Matic) Used on *Model 80200* Series type Nos. 0162, 0514, 948158, 948164.
		390219 Carburetor Assy. Used on *Model 80200* Series type No. 0413.
95	**93385**	Screw–Throttle Valve Mounting Sem
96A	**211067**	Throttle–Carburetor
96	**211203**	Valve–Throttle
97	**297961**	Shaft and Lever–Throttle
98	**93392**	Screw–Machine, Rd. Hd. –5-40 x 1/2"
99	**26157**	Spring
101	**93043**	Pin–Governor Shaft
114	**66594**	Gasket–Needle Valve Nut
	Note:	**66604** Gasket–Needle Valve Nut Used on *Model 80200* Series type Nos. 9023, 9024, 9253, 9347; also used on *Model 81200* Series type Nos. 951539, 951540.
116	**65978**	Packing–Needle Valve
117	**230590**	Nut–Needle Valve
118	**23433**	Valve–Needle
120	**92290**	Washer–Lock–No. 10 x 1/16 x 3/64
124	**93357**	Screw–Hex. hd.
147	**230591**	Seat–Needle Valve
148	**22235**	Washer–Needle Valve (2)
149	**26336**	Spring–Needle Valve
150	**220105**	Connector–Gov. Link
151	**93350**	Screw–Machine, Rd. Hd. 5-40 x 3/4"
	Note:	**92634** Screw–Machine, Rd. Hd. –5-40 x 5/8" Used on *Model 80200* Series type Nos. 0016, 0035, 0036, 0037, 0038, 0039, 0049, 0167, 0192, 0194, 0210, 0228, 0230, 0262, 0264, 0266, 0268, 0292, 0298, 0308, 0369, 0413, 0420, 0429, 0475, 0481, 0551, 0556, 948077, 948110, 948116, 948149, 948150, 948151,

REF. NO.	PART NO.	DESCRIPTION
		948152, 948217; also used on *Model 81200* Series type Nos. 0142, 0155, 0157, 0160, 0170, 948619, 948633, 948638, 948645, 948647, 948654, 948662, 948663.
152	**260746**	Spring Throttle Adjustment
152A	**260575**	Spring–Speed and Throttle Adjustment
153	**298031**	Screw–Carburetor Cam and Lever
	Note:	**93177** Screw–Bell Crank **230531** Collar–Bell Crank **220982** Washer Used on *Model 80200* Series type Nos. 0015, 0137, 0147, 0148, 0154, 0160, 0162, 0175, 0213, 0248, 0255, 0256, 0282, 0413, 0490, 0514, 0519, 0582, 948051, 948052, 948053, 948054, 948061, 948073, 948074, 948107, 948113, 948151, 948154, 948158, 948163, 948164, 948165, 948198; also used on *Model 81200* Series type Nos. 948566, 948582, 948589, 948661. **93342** Screw–Bell Crank **230450** Collar–Bell Crank Used on *Model 80200* Series type Nos. 0016, 0140, 0141, 0158, 0159, 0181, 0182, 0189, 0197, 0212, 0252, 0258, 0262, 0264, 0266, 0326, 0395, 0401, 0429, 0481, 0536, 0539, 0558, 948058, 948078, 948095, 948106, 948112, 948135, 948160, 948170, 948173, 948175, 948194, 948212, 948230; also used on *Model 81200* Series type Nos. 0157, 948559, 948562, 948579, 948594, 948597, 948607, 948619, 948631, 948633, 948663, 948667.
154	**92634**	Screw–Machine, Rd. Hd. –5-40 x 5/8"
155	**220107**	Cam–Speed Adjuster
156	**220949**	Lever–Speed Adjuster
	Note:	**220952** Lever–Speed Adjuster Used on *Model 80200* Series type Nos. 0201, 0431, 0435, 0437, 0441, 0443, 0444, 0446, 0449, 0454, 0455, 0460, 0463, 0468, 0470, 0472, 0478, 0482, 0510, 0511, 0522, 0524, 0531, 0543, 0555, 0565, 0569, 0585, 0591, 948159, 948190.
160	**294870**	Cleaner Assy.–Air (includes mounting stud)
161	**293991**	Bowl–Air Cleaner
162	**294861**	Cover and Filter–Air Cleaner
	Note:	**297778** Cover–Carburetor Intake Includes Mounting Stud Used on *Model 80200* Series type Nos. 0284, 948097, 948102, 948128, 948172, 948204; also used on *Model 81200* Series type No. 948546.
163	***27660**	Gasket–Air Cleaner Mounting
172	**27795**	Gasket–Air Cleaner
180	**296591**	Tank Assy.–Fuel (2 quart)
	Note:	**296377** Tank Assy.–Fuel (1 quart) Used on *Model 80200* Series type Nos. 0162, 0175, 0262, 0266, 0514, 9305, 9324, 9409, 9414, 9415, 9452, 948097, 948102, 948105, 948106, 948126, 948133, 948136, 948143, 948153, 948157, 948158, 948164, 948168, 948193, 948204; also used on *Model 81200* Series type Nos. 0163, 0177, 948546, 948549, 948552, 948598, 948622, 948630, 948632, 948638. **296592** Tank Assy.–Fuel (3 quart) Used on *Model 80200* Series type Nos. 0136, 0143, 0151, 0152, 0156, 0163, 0165, 0166, 0168, 0173, 0182, 0186, 0187, 0190, 0193, 0199, 0200, 0203, 0207, 0208, 0210, 0218, 0219, 0222, 0223, 0226, 0227, 0229, 0231, 0232, 0233, 0239, 0240, 0244, 0245, 0248, 0253, 0254, 0255, 0257, 0259, 0263, 0269, 0271, 0277, 0281, 0283, 0287,

Included in Gasket Set–Part No. 297275.

REF. NO.	PART NO.	DESCRIPTION
		0288, 0294, 0295, 0297, 0302, 0304, 0313, 0323, 0327, 0332, 0334, 0344, 0345, 0349, 0351, 0355, 0356, 0362, 0374, 0375, 0379, 0389, 0390, 0391, 0392, 0400, 0410, 0413, 0421, 0423, 0428, 0432, 0438, 0442, 0448, 0453, 0456, 0462, 0467, 0473, 0484, 0498, 0504, 0516, 0526, 0529, 0532, 0534, 0561, 0578, 0579, 0587, 0589, 0597, 9165, 9191, 9251, 9252, 9312, 9325, 9347, 9354, 9383, 9439, 9451, 9489, 9513, 9575, 948045, 948046, 948047, 948048, 948049, 948057, 948067, 948069, 948071, 948075 948076, 948079, 948080, 948082, 948084, 948089, 948090, 948095, 948099, 948103, 948104, 948115, 948116, 948117, 948118, 948119, 948121, 948134, 948137, 948140, 948141, 948146, 948150, 948155, 948174, 948176, 948179, 948180, 948182, 948186, 948191, 948194, 948199, 948203, 948205, 948206, 948207, 948213, 948215, 948218, 948220, 948222, 948224, 948225, 948226, 948228, 951039, 951040, 951042, 951044, 951045; also used on *Model 81200* Series type Nos. 0116, 0133, 0138, 0144, 0147, 0148, 0153, 0154, 0158, 0161, 0162, 0167, 0171, 0175, 0176, 0179, 0187, 0190, 0192, 0193, 0199, 0200, 948545, 948563, 948567, 948568, 948571, 948575, 948576, 948577, 948589, 948592, 948595, 948596, 948597, 948603, 948604, 948608, 948609, 948611, 948612, 948617, 948620, 948621, 948624, 948625, 948631, 948633, 948634, 948637, 948642, 948644, 948645, 948646, 948650, 948651, 948652, 948658, 948659, 948664, 948665, 951526, 951540, 951542, 951543, 951544.
		297880 Tank Assy. – Fuel (1 quart) Used on *Model 80200* Series type Nos. 948151, 948152.
		297904 Tank Assy. – Fuel (2 quart) Used on *Model 80200* Series type Nos. 948154, 948156, 948158, 948159.
		299817 Tank Assy. – Fuel (1 quart–with Bracket) Uses: **93062** Screw–Bracket to Cylinder Mtg. **66432** Washer–Bracket to Cylinder Mtg. Used on *Model 80200* Series type Nos. 0205, 0237, 0268, 0292, 0299, 0318, 0330, 0365, 0378, 0381, 0399, 0465, 0476, 0487, 0491, 0492, 0502, 0503, 0512, 0528, 0542, 0553, 0554, 0568, 0570, 0573, 0583, 0592.
181	**298425**	Cap–Fuel Tank
	Note:	**293270** Cap–Fuel Tank Used on type Nos. 0308, 0424, 0431, 0435, 0449, 0463, 0466, 0471, 0472, 0475, 0478, 0481, 0482, 0522, **297863** Cap–Fuel Tank Used on *Model 80200* Series type Nos. 0142, 0147, 0157, 0167, 0175, 0178, 0192, 0201, 0211, 0242, 0243, 0308, 0380, 0393, 0412, 0424, 0431, 0435, 0444, 0446, 0447, 0449, 0463, 0466, 0471, 0472, 0475, 0478, 0481, 0482, 0507, 0533, 0576, 9252, 9387, 9440, 9451, 9469, 9489, 9563, 948126, 948151, 948152, 948154, 948156, 948158, 948159, 948164, 948178, 948185, 948190, 948204, 948217; also used on *Model 81200* Series type Nos. 0170, 9139, 9183, 951541, 951545.

REF. NO.	PART NO.	DESCRIPTION
189	90366	Washer–Lock–5/16 x 1/8 x 1/16''
190	93341	Screw–Fuel Tank Mounting Sem
191	*27911	Gasket–Fuel Tank Mounting
	Note:	Engines using 3 quart tank No. 296592 require (2) gaskets.
200	297310	Blade–Governor (Used on and after Serial No. 6212310)
	Note:	**221456** Guide–Air Used on and after Serial No. 6212310 only on type number series 9000 to 9580 and 951010 to 951999.
200A	294298	Blade–Governor (Used before Serial No. 6212310)
	Note:	**220692** Guide–Air Used before Serial 6212310 only on type number series 951010 to 951999.
201	260898	Link–Governor Used after Serial No. 6602111 on type number series 0010 to 0580 except used on *Model 80200* Series type No. 0293 after Serial No. 65010111.
	260544	Link–Governor and Throttle Uses: **260585** Spring–Governor Link Used before Serial No. 6602121 on type number series 0010 to 0311 and on all type Nos. 948010 to 948999.
201A	260565	Link–Governor Used only on type number series 9000 to 9580 and 951010 to 951999.
202	260563	Link–Throttle Used only on type number series 9000 to 9580 and 951010 to 951999.
203	297069	Crank–Bell
	Note:	**221147** Crank–Bell Used on *Model 80200* Series type Nos. 0015, 0137, 0147, 0148, 0154, 0160, 0162, 0175, 0213, 0248, 0255, 0256, 0282, 0413, 0490, 0514, 0519, 0582, 948051, 948052, 948053, 948054, 948061, 948073, 948074, 948107, 948113, 948151, 948154, 948158, 948163, 948164, 948165, 948198; also used on *Model 81200* Series type Nos. 948566, 948582, 948589, 948661. **221390** Crank–Bell Used on *Model 80200* Series type Nos. 0016, 0140, 0141 0158, 0159, 0181, 0182, 0189, 0197, 0212, 0252, 0258, 0262, 0264, 0266, 0326, 0429, 0481, 0536, 0539, 0558, 948058, 948078, 948095, 948106, 948112, 948135, 948160, 948170, 948173, 948175, 948194, 948212, 948230; also used on *Model 81200* Series type Nos. 0157, 948559, 948562, 948579, 948594, 948597, 948607, 948619, 948631, 948633, 948663, 948667.
204	23688	Bushing–Gov. Lever
205	230671	Screw–Bell Crank
206	230149	Nut–Control Rod
207	26855	Spring–Control Rod
208	230680	Rod–Control
209	260041	Spring–Air Vane Gov. Used after Serial No. 6602111 on type number series 0010 to 0580 except on *Model 80200* Series type No. 0293 after Serial No. 65010111.
	Note:	**260545** Spring–Air Vane Governor Used before Serial No. 6602121 on type number series 0010 to 0311. **260662** Spring–Air Vane Governor Used on Model 80200 Series type Nos. 0328, 0330, 0352, 0378, 0388, 0399, 0568, 0570, 0572, 0573. **260687** Spring–Air Vane Governor Used on Model 80200 Series type Nos. 0323, 0332, 0344, 0366, 0515. **260722** Spring–Air Vane Governor Used on *Model 81200* Series type No. 948661.
209A	260546	Spring–Mechanical Governor Used only on type number series 9000 to 9580 and 951010 to 951999.
216	260449	Link–Choke
217	260189	Spring–Choke Link
218	221198	Washer–Choke Link (3)
219	296688	Governor Housing and Gear Assembly
220	221361	Washer–Thrust
221	230177	Cup–Governor

* Included in Gasket Set–Part No. 297275.

REF. NO.	PART NO.	DESCRIPTION
222	**220691**	Bracket–Mechanical Governor
223	**221389**	Lever–Gov. Control
	Note:	**221379** Lever–Gov. Control Used on *Model 80200* Series type Nos. 9161, 9184, 9187, 9312, 9314, 9354, 9416, 9417, 9513, 951043, 951046.
224	**93067**	Screw–Governor Lever Mounting Sem
225	**230181**	Shaft–Governor Lever
226	**220381**	Follower–Gov. Crank
227	**296087**	Lever Assy.–Governor
228	**93100**	Screw–Gov. Lever
229	**220680**	Washer–Thrust
230	**22826**	Washer–Spacer
231	**93064**	Screw–Sem
232	**260585**	Spring–Air Vane Governor Link Used before Serial No. 6602121 on type number series 0010 to 0311 and 948010 to 948999.
	260478	Spring–Mechanical Governor Link Used on type number series 9000 to 9580 and 951010 to 951999.
256	**220952**	Lever–Speed Adjuster
257	**93263**	Screw–Fil hd., 10-32 x 3/8"
	Note:	**93105** Screw–Sem **222018** Bracket–Locator Used on *Model 80200* Series type Nos. 0357, 0458, 0515.
258	**93062**	Screw–Sem
259	**294502**	Bracket–Control Wire Casing
264	**90355**	Nut–Hex., 10-32
265	**221370**	Clamp–Casing
267	**93496**	Screw–Sem
268	**66986**	Casing–Control Wire–48" long
	Note:	If longer casing is needed, specify length in inches; if a shorter casing is needed order No. 66986 and cut to required length.
269	**26099**	Wire–Control 54" long
	Note:	If longer wire is needed, specify length in inches; if shorter wire is needed order No. 26099 and cut to required length.
270	**63426**	Locknut–Control Wire Casing
271	**290568**	Lever Assy.–Control
280	**221384**	Bracket
297	**91811**	Locknut–Exhaust Elbow
298	**220859**	Locknut–Muffler
299	**294441**	Muffler–Exhaust (Lo-Tone)
300	**89966**	Muffler–Exhaust
	Note:	**89945** Muffler–Exhaust Used on type Nos. 9309, 9397, 948631. **292054** Muffler–Exhaust Used on *Model 80200* Series type Nos. 0186, 0256, 0273, 0284, 0293, 0431, 0435, 0446, 0463, 0466, 0471, 0475, 0478, 0481, 0482, 948110, 948172, 948182; also used on *Model 81200* Series type Nos. 948614, 948642, 948653. **295905** Muffler–Exhaust Used on *Model 80200* Series type Nos. 0015, 0016, 0035, 0036, 0037, 0038, 0039, 0040, 0049, 0150, 0172, 0173, 0185, 0193, 0218, 0228, 0265, 0271, 0281, 0296, 0328, 0334, 0336, 0348, 0360, 0372, 0376, 0385, 0389, 0393, 0407, 0411, 0412, 0419, 0422, 0426, 0427, 0429, 0444, 0447, 0449, 0464, 0474, 0477, 0497, 0498, 0500, 0507, 0510, 0518, 0533, 0541, 0552, 0561, 0567, 0576, 0579, 0586, 9044, 9252, 9354, 9387, 9416, 9440, 9469, 9563, 948102, 948105, 948121, 948136, 948151, 948153, 948181, 948199, 948202, 948204, 948208, 951043; also used on *Model 81200* Series type Nos. 0132, 0170, 9139, 9183, 948552, 948618, 948622, 948630, 948632, 948652, 951541, 951545. **297934** Muffler–Exhaust Used on *Model 80200* Series type Nos. 0157, 0211, 948157, 948185.
303	**91838**	Elbow–Exhaust (45° Street)
	Note:	**91943** Elbow–Exhaust (90° Street) Used on *Model 80200* Series type Nos. 0210, 0263, 0307, 0587, 9309, 9397, 9418, 9571, 948072, 948137, 948148, 948150, 948199; also used on *Model 81200* Series type Nos. 0161, 948664.

REF. NO.	PART NO.	DESCRIPTION
304	**294260**	Housing–Blower (For Rewind Starter)
	Note:	**294263** Housing–Blower (For Rope Starter) Used on Model 80201, 80231, 80251, 81201, 81231, 81251 Series. **294282** Housing–Blower (For Rewind Starter) Used on *Model 80200* Series type Nos. 0247, 948068. **294338** Housing–Blower (For Rewind Starter) Used on *Model 80200* Series type Nos. 0015, 0016, 0035, 0036, 0037, 0038, 0039, 0040, 0049, 0157, 0172, 0211, 0231, 0260, 0266, 0270, 0278, 0291, 0301, 0329, 0339, 0342, 0351, 0361, 0366, 0373, 0385, 0388, 0392, 0398, 0399, 0400, 0402, 0404, 0405, 0406, 0408, 0410, 0420, 0424, 0425, 0427, 0430, 0431, 0437, 0441, 0446, 0447, 0448, 0463, 0466, 0468, 0471, 0472, 0478, 0482, 0483, 0494, 0500, 0507, 0508, 0514, 0516, 0527, 0533, 0537, 0543, 0544, 0545, 0547, 0550, 0552, 0555, 0556, 0564, 0570, 0573, 0576, 0586, 0591, 9044, 9347, 948075, 948105, 948132, 948157, 948167, 948181, 948183, 948185; also used on *Model 81200* Series type No. 948622. **295038** Housing–Blower (For Rewind Starter) Used on *Model 80200* Series type No. 0151. **295190** Blower Housing and Brackets (For Electric Starter) Used on Model 80203, 80233, 80253, 81203, 81233, 81253 Series. **295816** Housing–Blower (For Rewind Starter) Used on *Model 80200* Series type Nos. 0207, 0209, 0282, 0313, 0316, 0335, 0462, 0523, 9312. 948051, 948186, 948219. **296792** Housing–Blower (For Wind-up Starter) Used on *Model 80206, 81206* Series. **296894** Housing–Blower (For Rewind Starter) Used on *Model 80200* Series type Nos. 0142, 0177, 0237, 0248, 0353, 0355, 0477, 0506, 0540, 0583, 0592, 948073, 951040; also used on *Model 81200* Series type Nos. 948597, 948598.
305	**93158**	Screw–Blower Housing Mounting
	Note:	**92666** Screw–Cap, Hex. Hd., 1/4-20 x 1/2" **92778** Washer–Lock–Shakeproof Used to mount Blower Housing on *Model 80200* Series type No. 9495; also on *Model 81200* Series type No. 9188. **93294** Screw–Blower Housing Mounting Used on Model 80203, 80206, 81203, 81206, Series.
306	**220478**	Shield–Cylinder
307	**93042**	Screw–Cylinder Shield Mounting Sem
308	**220581**	Cover–Cylinder Head
	Note:	**220354** Cover–Cylinder Head Used on *Model 80200* Series type Nos. 9415, 9452.
309	**295188**	Motor–Electric Starter
310	**93239**	Bolt–Case
311	**295697**	Brush–Starter Motor
312	**260404**	Spring–Brush
321	**210711**	Pulley–Starter
323	**67228**	Belt–Vee
324	**220648**	Screen–Electric Starter Pulley
325	**293959**	Pulley–Starter (1/2" hole in Pulley)
	Note:	For Pulley with Screen with 5/8" hole in Pulley–order No. 298731. **220547** Pulley–Starter (1/2" hole in Pulley) Used on *Model 80200* Series type No. 0257.
328	**221038**	Guard–Belt
329	**93014**	Screw–Belt Guard Mounting Sem
330	**294584**	Rope–Starter
331	**62577**	Washer–Flywheel (1/2" hole)
	Note:	For Washer with 5/8" hole–order No. 220865.
332	**91708**	Nut–Flywheel (1/2-20 left hand thread)
	Note:	For Flywheel Nut with 5/8-18 right hand

REF. NO.	PART NO.	DESCRIPTION
		thread–order No. 92284.
333	298502	Armature–Magneto (Used on and after Serial No. 6212310)
	Note:	**298274** Armature–Magneto Used on *Model 80200* Series type Nos. 0391, 9495; also used on *Model 81200* Series type Nos. 0162, 0479, 0597, 9188.
333A	291617	Armature–Magneto (Used before Serial No. 6212310)
334	93381	Screw–Armature Mounting Sem
335	93381	Screw–Armature Mounting Sem
336	292149	Cable–Ignition
	Note:	This group of ignition cables including No. 292149 is used on engines when cable is not molded into the coil. **294519** Cable–Ignition Used on type Nos. 948076, 948561. **294577** Cable–Ignition Used on type Nos. 948590, 948628, 948644.
337	298809	Plug–Spark (with gasket) (1-1/2" High–38 M. M.)
	Note:	Spark Plugs **298809**, **29693** and **293918** use Ignition Cable Terminal No. 221798. **29693** Plug–Spark (with gasket) (2" High–51 M. M.) **293918** Plug–Spark Used on *Model 80200* Series type Nos. 0407, 9044, 9325, 9383, 9414, 9415, 9450, 951045.
340	26018	Spring–Breaker Arm
341	93381	Screw–Sem
342	65704	Plunger–Breaker Point
344	93042	Screw–Condenser Clamp Mounting Sem
345	220366	Cover–Breaker Point and Condenser
	Note:	**222168** Cover–Breaker Point and Condenser Used on *Model 80200* Series type Nos. 0447, 0507, 0533, 0576, 9489.
346	93014	Screw–Dust Cover Mounting
347	221808	Switch–Stop
	Note:	**293739** Switch–Stop Used on *Model 80200* Series type Nos. 0157, 0178, 0211, 0212, 0243, 0268, 0284, 0292, 0298, 0342, 0361, 0380, 0389, 0393, 0412, 0431, 0435, 0521, 0526, 9383, 9387, 9417, 9489, 948097, 948105, 948128, 948156, 948157, 948178, 948185, 948230; also used on *Model 81200* Series type Nos. 0132, 0170, 948546, 948589, 948591, 948622, 948629, 948638, 951539.
348	296110	Plate Assembly–Stop Switch Insulator
353	92791	Washer–Lock–Shakeproof
354	90576	Nut–Hex. –8-32
356	391115	Wire–Ground
357	91539	Key–3/16" Square
358	297275	Gasket Set
362	291630	Shield–Spark Plug (with stop switch)
363	19069	Puller–Flywheel (Optional Accessory)
364	295698	Plug–Connector
365	93241	Screw–Plug Mounting
		(long)
366	93240	Screw–Plug Mounting (short)
370	66432	Washer–Plain
371	260275	Restrictor–Belt
372	220477	Clamp–Condenser
375	294628	Breaker Points and Condenser Set
	Note:	**299061** Ignition Kit Includes: **294628** Point Set **65704** Plunger **61760** Key–Flywheel
392	260455	Spring–Fuel Pump Diaphragm
394	270026	Diaphragm
432	221377	Cap–Spring
433	93265	Pin–Diaphragm Cover
434	210959	Cover–Diaphragm
435	93141	Screw–Diaphragm Cover
454	296178	Housing–Fuel Pipe Screen (for 3/16" O. D. Brass Pipe Only)
	296191	Housing–Fuel Pipe Screen (for 1/8" O. D. Brass Pipe Only)
	Note:	**297219** Pipe–Fuel (2-5/8" long) Plastic Used on *Model 80200* Series type Nos. 0162, 0175, 0205, 0237, 0262, 0266, 0268, 0292, 0299, 0318, 0330, 0365, 0378, 0381, 0465, 0476, 0487, 0491, 0492, 0502, 0503, 0512, 0514, 0528, 0542, 0553, 0554, 0568, 0570, 0573, 0583, 9305, 9324, 9409, 9414, 9415, 9452, 948097, 948102, 948105, 948106, 948126, 948133,

REF. NO.	PART NO.	DESCRIPTION
		948136, 948143, 948151, 948152, 948153, 948157, 948158, 948164, 948168, 948193, 948204; also used on *Model 81200* Series type Nos. 0163, 0177, 948546, 948549, 948552, 948598, 948622, 948630, 948632, 948638.
455	**296455**	Cup, Hub, and Spring Assembly
456	**221222**	Plate–Retainer
458	**296305**	Handle Assembly–Cranking
459	**221332**	Pawl–Ratchet
460	**93272**	Retainer–Ratchet Pawl
461	**93231**	Screw–Handle Mtg.
462	**221237**	Washer–Handle Mtg.
463	**296445**	Holder Assembly–Flywheel
464	**93291**	Rivet–Holder Assy. Mounting
465	**221226**	Washer–Holder Assy. Mounting
466	**93272**	Retainer–Holder Control Knob
467	**211017**	Knob–Control
506	**90200**	Screw–Machine, Fil. Hd.–8-32 x 1/2"
507	**66895**	Insulator
508	**93294**	Screw–Blower Housing Mounting Sem
513	**296567**	Clutch Assembly–Electric Starter
515	**260537**	Spring–Ratchet Pawl
516	**260374**	Spring–Connector
521	**297973**	Shielding–Ignition Cable Used on and after Serial No. 6212310 on cables molded into ignition coil on type Nos. 948590, 948628, 948644.
523	**69345**	Cap–Oil Filler
	Note:	**297357** Cap–Oil Filler Used on *Model 80200* Series type Nos. 948136, 948153; also used on *Model 81200* Series type No. 948632.
524	**65304**	Gasket–Oil Filler Cap
525	**91258**	Nipple–Oil Filler
526	**93343**	Screw–Tank Bracket Mounting Sem
527	**221279**	Clamp–Breather Tube
528	**230634**	Tube–Breather
	Note:	**66638** Tube–Breather Used on type No. 948561.
529	**67608**	Grommet–Breather Tube
530	**296304**	Housing Assy.–Pawl
531	**230615**	Ratchet–Top Starter
532	**260500**	Washer–Spring
533	**67478**	Knob–Stop
534	**93322**	Screw–Air Cleaner
	Note:	**93568** Screw–Air Cleaner **270551** Spacer–Air Cleaner Screw Used on *Model 80200* Series type Nos. 0357, 0458, 0515. **230058** Stud–Air Cleaner **92067** Nut–Wing Used on *Model 81200* Series type Nos. 0162, 0391, 0479.
535	**27987**	Element–Air Cleaner
536	**296766**	Cleaner Assy.–Air
538	**260683**	Rod–Speed Control (square rod)
	Note:	For Round Wire Rod order: **260560** Rod–Speed Control
539	**260684**	Link–Rod (Used only with Square Rod)
540	**221380**	Lever–Speed Adjuster
	Note:	**220678** Lever–Speed Adjuster Used on *Model 80200* Series type Nos. 0035, 0036, 0037, 0038, 0039, 0049, 0137, 0147, 0167, 0175, 0192, 0228, 0236, 0282, 0369, 0407, 0413, 0447, 0461, 0474, 0500, 0507, 0533, 0556, 0576, 0595, 948151, 948152, 948154, 948217; also used on *Model 81200* Series type Nos. 0142, 0160, 948647, 948654, 948662.
541	**22398**	Washer–Speed Adjuster and Governor Lever
542	**91359**	Screw–Machine, Fil. Hd.–10-32 x 3/4"
	Note:	**91494** Screw–Machine, Fil. Hd.–10-32 x 3/8" **221372** Clip–Speed Control Rod Used only with Round Wire Control Rod
544	**296769**	Armature–Starter
545	**296770**	Case Assembly–Long Shaft End
546	**296775**	Case Assembly–Short Shaft End
547	**270025**	Washer–Fiber
548	**221381**	Washer–Thrust (Steel)
608	**294259**	Starter Assy.–Rewind
	Note:	For 110 Volt Electric Starter Kit–order No. 295325.
609	**260564**	Spring–Throttle Link Used on type number series 9000 to 9580 and 951010 to 951999.
612	**296811**	Pipe–Fuel (1-5/8" long) Plastic
614	**221384**	Bracket
	Note:	**222161** Anchor–Spring Used on *Model 80200* Series type Nos. 0431, 0435, 0436, 0437, 0441, 0443, 0446, 0449, 0454, 0463, 0468, 0470, 0472, 0478, 0482,

80200 To 80297
81200 To 81297

REF. NO.	PART NO.	DESCRIPTION
		0522, 0524, 0531, 0543, 0555, 0565, 0569, 0585.
628	**93149**	Screw–Machine, Rd. Hd. –5-40 x 3/8"
629	**260546**	Spring–Throttle Return
	Note:	**260871** Spring–Throttle Return Used on *Model 80200* Series type Nos. 0431, 0435, 0436, 0437, 0441, 0443, 0446, 0449, 0454, 0463, 0468, 0470, 0472, 0478, 0482, 0522, 0524, 0531, 0543, 0555, 0565, 0569, 0585.
630	**221425**	Arm–Throttle Control
631	**221427**	Washer–Throttle Control Arm
632	**260575**	Spring–Governor Control Lever
633	**93364**	Screw–Machine, Rd. Hd. –6-32 x 7/8"
	Note:	**90056** Screw–Machine, Rd. Hd. –6-32 x 5/8" Used on *Model 80200* Series type Nos. 9023, 9024, 9253, 9347, 9440, 9469; also used on *Model 81200* Series type Nos. 9139, 951541.
634	**270167**	Washer–Throttle Shaft (Felt)
635	**66538**	Elbow–Spark Plug
681	**299060**	Needle Valve Kit
682	**211516**	Shield–Starter Clutch
822	**296732**	Starter Assy. – Wind-Up